สำนักงานการบินพลเรือนแห่งประเทศไทย
The Civil Aviation Authority of Thailand

Global Aeronautical Distress and Safety System (GADSS) Guideline

CAAT-GL-ANS-GADSS

Issue: 01

Revision: 00

Date: 30 October 2026

Approved by

Air Chief Marshal

Manat Chavanaprayoon

Director General of the Civil Aviation Authority of Thailand

Intentionally Left Blank

Abbreviations

Abbreviations	Meaning
4D	Four-dimensional
ACC	Area Control Center
ADL	Location of an Aircraft in Distress
ADS-B	Automatic Dependent Surveillance – Broadcast
ADS-C	Automatic Dependent Surveillance – Contract
ADT	Autonomous Distress Tracking
AFTN	Aeronautical Fixed Telecommunications Network
AIA	Accident Investigation Authority
ALERFA	Alert Phase
ANS	Air Navigation Services Standards Department
ANSP	Air Navigation Services Provider
AOC	Air Operator Certificate
AT	Aircraft Tracking
ATC	Air Traffic Control
ATS	Air Traffic Services
ATSU	Air Traffic Services Unit
CAAT	The Civil Aviation Authority of Thailand
COSPAS-SARSAT	**Co**smicheskaya **S**istema **P**oiska **A**variynyh **S**udov-**S**earch **a**nd **R**escue **S**atellite-**A**ided **T**racking
CVR	Cockpit Voice Recorder
DETRESFA	Distress Phases
DNA	Data Network for Aviation
ELT	Emergency Locator Transmitter
ELT(DT)	Emergency Locator Transmitter – Distress Tracking
EPIRB	Emergency Position-Indicating Radio Beacon
EUROCAE	European Organisation for Civil Aviation Equipment
FDR	Flight Data Recorder
FIR	Flight Information Region
FRDR	Flight Recorder Data Recovery
GADSS	Global Aeronautical Distress and Safety System
GMDSS	Global Maritime Distress and Safety System
GNSS	Global Navigation Satellite System
HF	High Frequency

Abbreviations	Meaning
IAMSAR	International Aeronautical and Maritime Search and Rescue
ICAO	The International Civil Aviation Organization
ICAO OPS CTRL	The International Civil Aviation Organization Operational Control Directory
INCERFA	Uncertainty Phase
kg	kilogram
kHz	kilohertz
LADR	Location of an Aircraft in Distress Repository
lb	pound
LEOSAR	Low-altitude Earth Orbit Search and Rescue
LKP	Last Known Position
LUT	Local User Terminal
MCC	Mission Control Center
MEOSAR	Medium-altitude Earth Orbit Search and Rescue
MHz	Megahertz
MSS	Mobile satellite service
NM	Nautical Mile
OPS	Flight Operations Standards Department
PFL	Post Flight Localization
PLB	Personal Locator Beacon
RCC	Rescue Coordination Center
RLS	Return Link Signal
SAR	Search and Rescue
SARPs	Standards and Recommended Practices
SATCOM	Satellite Communications
SPOC	SAR Point of Contact
SRR	Search and Rescue Region
SWIM	System Wide Information Management
UIR	Upper Information Region
ULD	Underwater Locating Device
VHF	Very High Frequency

Definitions

Term	Definition
Aircraft Operator	A person, organization or enterprise engaged in or offering to engage in an aircraft operation. This means: a) a person or company who, for compensation or hire, participates in the carriage by air transport of persons or property, or other aerial-work services using aircraft; commonly an "airline" or other type of air transport or services company; and b) a person who owns or shares ownership of a general aviation aircraft that is used by them but not for commercial air transport purposes.
Aircraft Tracking (AT)	A process, established by the operator, that maintains and updates, at standardized intervals, a ground- based record of the four dimensional position of individual aircraft in flight.
Air Navigation Services Provider (ANSP)	The company or organization providing air traffic services, not the individual air traffic services unit.
Air Navigation System	A generic term for all systems as detailed in the ICAO Annexes and any related systems required to interface with these aviation systems.
Air Traffic Services (ATS)	A generic term meaning variously, flight information service, alerting service, air traffic advisory service, air traffic control service (area control service, approach control service or aerodrome control service).
Air Traffic Services Unit (ATSU)	A generic term meaning variously, air traffic control unit, flight information center or air traffic services reporting office.
Alert phase (ALERFA)	A situation wherein apprehension exists as to the safety of an aircraft and its occupants.
Alerting service	A service provided to notify appropriate organizations regarding aircraft in need of search and rescue aid, and assist such organizations as required.
Area Control Center (ACC)	An air traffic control facility primarily responsible for providing Air Traffic Control services to Instrument Flight Rules aircraft in controlled areas under its jurisdiction.
Autonomous Distress Tracking (ADT)	The capability using transmission of information from which a position of an aircraft in distress can be determined at least once every minute and which is resilient to failures of the aircraft's electrical power, navigation and communication systems.
Autonomous Distress Tracking (ADT) Device	A generic term describing equipment which detects a distress condition and transmits information from which a position can be determined at least once every minute.

Term	Definition
Autonomous Distress Tracking (ADT) Service Provider	An organization providing aircraft operators with means to make available autonomously transmitted position information of an aircraft in distress.
Cospas-Sarsat System	A satellite system designed to detect and locate activated distress beacons transmitting in the frequency band of 406.0 - 406.1 MHz.
Distress Alert	The reporting of a distress incident to a unit which can provide or coordinate assistance.
Distress Condition	A state that, if the aircraft behavior event is left uncorrected, can result in an accident. Aircraft behavior events can include, but are not limited to, unusual attitudes, unusual speed conditions, collision with terrain and ground proximity warnings, and total loss of thrust/propulsion on all engines.
Distress Phase (DETRESFA)	A situation wherein there is reasonable certainty that an aircraft and its occupants are threatened by grave and imminent danger and require immediate assistance.
Ditching	The forced landing of an aircraft on water.
Emergency Locator Transmitter (ELT)	A generic term (related to aircraft) describing equipment which broadcasts distinctive signals on designated frequencies and, depending on application, may be automatically activated by impact or be manually activated. An ELT may be any of the following: a) Automatic fixed ELT (ELT(AF)). An automatically activated ELT which is permanently attached to an aircraft. b) Automatic portable ELT (ELT(AP)). An automatically activated ELT which is rigidly attached to an aircraft but readily removable from the aircraft. c) Automatic deployable ELT (ELT(AD)). An ELT which is rigidly attached to an aircraft and which is automatically deployed and activated by impact and, in some cases, also by hydrostatic sensors. Manual deployment is also provided. d) Survival ELT (ELT(S)). An ELT which is removable from an aircraft, stowed so as to facilitate its ready use in an emergency, and manually activated by survivors.
Emergency Phase	A generic term meaning, as the case may be, uncertainty phase, alert phase or distress phase.
Emergency Position-Indicating Radio Beacon (EPIRB)	A device, usually carried aboard maritime craft, that transmits a signal that alerts search and rescue authorities and enables rescue units to locate the scene of the distress.

Term	Definition
EUROCAE	EUROCAE is a non-profit organization formed at Lucerne, Switzerland, in 1963, as a European forum focusing on electronic equipment for air transport. It deals exclusively with aviation standardization, for both airborne and ground systems and equipment.
Flight Plan	Specified information provided to air traffic services units, relative to an intended flight or portion of a flight of an aircraft.
Global Maritime Distress and Safety System (GMDSS)	A global communications service based upon automated systems, both satellite-based and terrestrial, to provide distress alerting and promulgation of maritime safety information for mariners.
Global Navigation Satellite System (GNSS)	Worldwide position and time determination system that includes one or more satellite constellations and receivers.
Local User Terminal (LUT)	An earth receiving station that receives beacon signals relayed by Cospas-Sarsat satellites, processes them to determine the location of the beacons and forwards the signals.
Locating	The finding of ships, aircraft, units or persons in distress.
Location of Aircraft in Distress Repository (LADR)	A secure, web-based storage facility which collects, stores and makes available (to subscription holders) position information supplied from ADT devices, so that operators can comply with ICAO Annex 6 — Operation of Aircraft, Part I — International Commercial Air Transport — Aeroplanes, paragraph 6.18.3.
Location of Aircraft in Distress Repository (LADR) Contributor	A subset of LADR subscriber, which provides data to the LADR. This would typically be an ADT service provider, but could be, for example, an air traffic services unit, a rescue coordination center, or an airline operations department.
Location of Aircraft in Distress Repository (LADR) Data User	A subset of LADR subscriber, which has 'read only' access to the LADR. This could be, for example, an accident investigation authority, State department, or an airline operations department.
Mission Control Center (MCC)	Part of the Cospas–Sarsat system that accepts alert messages from the local user terminal(s) and other mission control centers to distribute to the appropriate rescue coordination centers or other search and rescue points of contact.
Oceanic Area	Airspace which overlies waters outside the territory of a State.
Operational Control	The exercise of authority over the initiation, continuation, diversion or termination of a flight in the interest of the safety of the aircraft and the regularity and efficiency of the flight.
Operator	A person, organization or enterprise engaged in or offering to engage in an aircraft operation.
Personal Locator Beacon (PLB)	A portable device, manually activated, which transmits a distress signal on 406 MHz, and may have an additional homing signal on a separate frequency.

Term	Definition
Rescue	An operation to retrieve persons in distress, provide for their initial medical or other needs, and deliver them to a place of safety.
Rescue Coordination Center (RCC)	A unit responsible for promoting efficient organization of search and rescue services and for coordinating the conduct of search and rescue operations within a search and rescue region.
Search	An operation normally coordinated by a rescue coordination center using available personnel and facilities to locate persons in distress.
Search and Rescue Point of Contact (SPOC)	A point of contact for SAR, designated by the national administration, that is responsible for receiving distress alert information and providing the information to appropriate SAR authorities.
Search and Rescue Region (SRR)	An area of defined dimensions, associated with a rescue coordination center, within which search and rescue services are provided.
Search and Rescue Service	The performance of distress monitoring, communication, coordination and search and rescue functions, initial medical assistance or medical evacuation, through the use of public and private resources, including cooperating aircraft, vessels and other craft and installations.
Uncertainty Phase (INCERFA)	A situation wherein uncertainty exists as to the safety of an aircraft and its occupants.

Record of Amendments

Issue	Revision	Date	Amendment Summary
01	00	30-Oct-2026	First Issue

Table of Contents

Abbreviations 1
Definitions 3
Record of Amendments 7
Table of Contents 8
0. Introduction 9
0.1 Background 9
0.2 Purpose 9
0.3 Applicability 9
0.4 Reference 9
1. GADSS OVERVIEW 11
1.1 Introduction 11
1.2 GADSS Objective 11
1.3 GADSS Applicability 11
1.4 GADSS Architecture 12
1.5 Related SARPs 12
2. AIRCRAFT TRACKING 13
2.1 Introduction 13
2.2 SARPs for Aircraft Tracking 13
2.3 Aircraft Tracking Function 15
3. LOCATION OF AN AIRCRAFT IN DISTRESS 17
3.1 Introduction 17
3.2 SARPs for Location of an Aircraft in Distress 17
3.3 Autonomous Distress Tracking System 18
3.4 Location of an Aircraft in Distress Function 19
3.5 ADT and SAR service provider 22
3.6 Utilizing ELT (DT) to locate aircraft in distress 23
4. POST FLIGHT LOCALIZATION 27
4.1 Introduction 27
4.2 SARPs for Post Flight Localization 27
4.3 Post Flight Localization Function 28
5. FLIGHT RECORDER DATA RECOVERY 31
5.1 Introduction 31
5.2 SARPs for Flight Recorder Data Recovery 31
5.3 Flight Recorder Data Recovery Function 33
6. GADSS INFORMATION MANAGEMENT 35
6.1 Introduction 35
6.2 SARPs for Location of an Aircraft in Distress Repository and OPS Control Directory 35
6.3 Location of an Aircraft in Distress Repository 35
6.4 OPS Control Directory 41
6.5 Processes and Procedures 42
6.6 ICAO ADT survey 46
Appendix A – Aircraft tracking missed position report message template 47
Appendix B – ICAO ADT Survey 49

0. Introduction

0.1 Background

In accordance with ICAO Annex 12 (Search and Rescue), the Civil Aviation Authority of Thailand (CAAT) serves as the regulatory authority for Aeronautical Search and Rescue Standards, including the implementation of the Global Aeronautical Distress and Safety System (GADSS) which enhances the ability to trigger SAR action when an aircraft is in distress.

To promote GADSS, Global Aeronautical Distress and Safety System (GADSS) Guideline has been developed to support SAR service providers, air navigation service providers, aircraft operators and other relevant stakeholders in understanding the requirement associated with GADSS.

It should be clearly understood that this document has no legal status. It is intended to provide recommendations and guidance to illustrate a mean but not necessarily the only mean of complying with the Regulations, or to explain certain regulatory requirements by providing interpretative and explanatory material.

0.2 Purpose

This guideline for the implementation and operation of GADSS provisions enhances the aircraft tracking, location of an aircraft in distress, post flight localization and flight recorder data recovery.

0.3 Applicability

This document is published on the CAAT website (www.caat.or.th) and will be an uncontrolled document when printed out, or when open as an electronic file from other sources than CAAT website.

0.4 Reference

0.4.1 ICAO Annex 6 Operation of Aircraft, Part I – International Commercial Air Transport – Aeroplanes

0.4.2 ICAO Annex 11 Air Traffic Services

0.4.3 ICAO Annex 12 Search and Rescue

0.4.4 GADSS – Concept of Operations

0.4.5 ICAO Doc 9731 – International Aeronautical and Maritime Search and Rescue (IAMSAR) Manual

0.4.6 ICAO Doc 10054 – Manual on Location of Aircraft in Distress and Flight Recorder Data Recovery

0.4.7 ICAO Doc 10150 – Manual on the Functional Specifications for the Location of an Aircraft in Distress Repository (LADR)

0.4.8 ICAO Doc 10165 – Manual on Global Aeronautical Distress and Safety System (GADSS)

Intentionally Left Blank

1. GADSS OVERVIEW

1.1 Introduction

The Global Aeronautical Distress and Safety System (GADSS) was established to mitigate challenges in the global air navigation system, regarding the timely identification and localization of aircraft in distress, such as occurred with the accidents of Air France flight AF447 and Malaysia Airlines flight MH370.

In 2014 Malaysia Airlines flight MH370, a Boeing 777 with 239 persons on board, disappeared when flying from Kuala Lumpur, Malaysia to Beijing, China, and Air Asia QZ8501 was lost on a flight from Surabaya to Singapore. The MH370 event resulted in probably the largest and most expensive search response for a missing aircraft in human history. Together with Air France flight AF447, which crashed into the Atlantic Ocean in 2009, these tragedies have highlighted vulnerabilities in the current air navigation system, including the SAR system, which have hampered timely identification and localization of aircraft in distress, particularly in remote oceanic areas, hindering effective response efforts. This significantly hindered effective SAR efforts and recovery operations.

GADSS provides an effective and globally consistent approach to enhancing the alerting procedures of search and rescue services by addressing a number of key improvement areas.

GADSS ensures an up-to-date record of aircraft progress is maintained and, in case of a crash, forced landing or ditching, ensures information on the location of survivors, the aircraft and recoverable flight data is available. For GADSS to function as intended, flight crew and aircraft operators, air traffic controllers (ATCs) and air navigation services providers (ANSPs), autonomous distress tracking (ADT) service providers, and search and rescue (SAR) service providers, as rescue coordination centres (RCCs) need to understand each other's roles, responsibilities and processes to ensure effective communication, robust coordination and harmonized implementation across the globe.

1.2 GADSS Objective

The objectives of the GADSS are to:

a) assist in timely detection and subsequent tracking of aircraft in distress;
b) assist in timely identification of the accurate location of end of flight;
c) assist in timely retrieval of Flight Recorder Data (FRD); and
d) enable timely and effective SAR operations and accident investigation.

1.3 GADSS Applicability

The GADSS applies to all commercial aircraft operators on 1 January 2025 at the latest with an individual certificate of airworthiness (CofA) first issued on or after 1 January 2024 that:

a) Operate in International Airspace:
   i. All aircraft with maximum certificated takeoff mass of over 27,000 kg (60,000 lbs.);
   ii. With seating capacity greater than 19 seats.
b) Operate in Oceanic Airspace:
   i. All aircraft with maximum certificated takeoff mass of over 45,500 kg (100,300 lbs.);
   ii. With seating capacity greater than 19 seats.

1.4 GADSS Architecture

The GADSS consists of the following 4 main elements and information management:

a) Aircraft Tracking (AT)
b) Location of an Aircraft in Distress (ADL)
c) Post Flight Localization (PFL);
d) Flight Recorder Data Recovery (FRDR); and
e) GADSS Information Management, which is comprised of the following two services:
   i. OPS Control Directory (OPS CTRL); and
   ii. Location of an Aircraft in Distress Repository (LADR).

The relationship between the primary functions and stakeholders of the GADSS is shown in Figure 1–1.

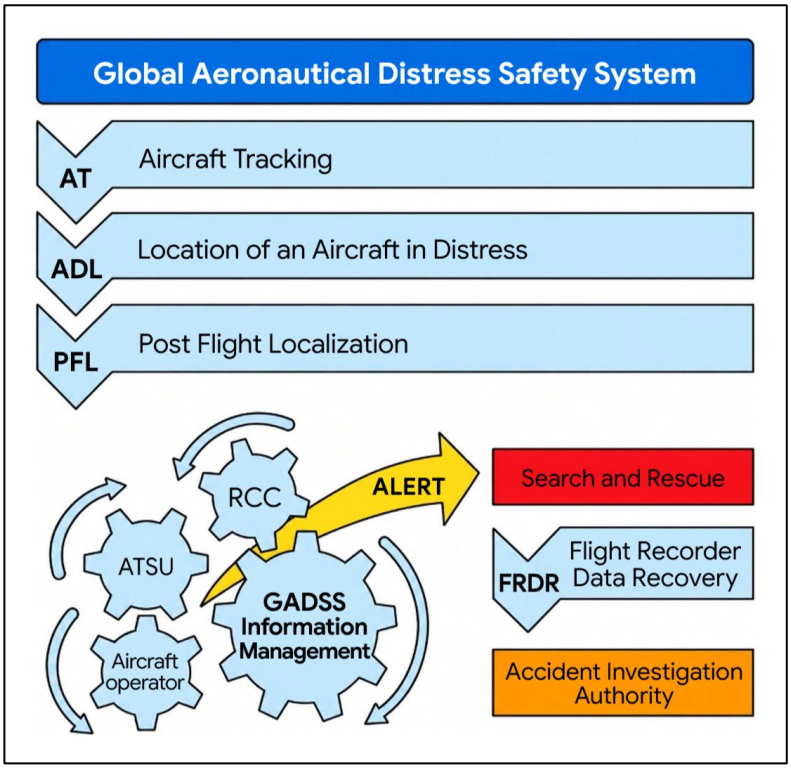

Figure 1–1: Primary Functions of the GADSS

1.5 Related SARPs

The ICAO Standards and Recommended Practices (SARPs) which are relevant to GADSS elements and information management are summarized in Table 1-1.

Table 1-1: ICAO SARPs for GADSS

GADSS Element	Reference
Aircraft Tracking (AT)	ICAO Annex 6, Part I, 3.5
Location of Aircraft in Distress (ADL)	ICAO Annex 6, Part I, 6.18
Post Flight Localization (PFL)	ICAO Annex 6, Part I, 6.17
Flight Recorder Data Recovery (FRDR)	ICAO Annex 6, Part I, 6.3.5 and 6.3.6
GADSS Information Management	ICAO Annex 12, 2.3.6 and 2.3.7

2. AIRCRAFT TRACKING

2.1 Introduction

This chapter details the function of Aircraft Tracking (AT). Routine AT under normal conditions is a core element of the GADSS intended to leverage existing technologies to:

a) assist in the timely identification and location of aircraft;
b) reduce the reliance on procedural methods used for determining aircraft position;
c) help ensure the availability and sharing of accurate aircraft position data (with the relevant entities); and
d) help to improve the effectiveness of alerting services and supporting search and rescue (SAR) service.

The SARPs for AT allow stakeholders to meet tracking requirements using available and planned technologies and procedures, as deemed necessary. In general, the SARPs:

a) do not introduce any changes to current ATSU procedures;
b) establish operator responsibilities for tracking their aircraft based on areas of operation;
c) are not technology specific; and
d) establish communication protocols between the aircraft operator and ATSU.

2.2 SARPs for Aircraft Tracking

The SARPs for AT are specified in ICAO Annex 6 Operation of Aircraft, Part I – International Commercial Air Transport – Aeroplanes, 3.5 – Aircraft Tracking.

2.2.1 ICAO Annex 6, Part I, 3.5.1

The operator shall establish an aircraft tracking capability to track aeroplanes throughout its area of operations.

Note.— Guidance on aircraft tracking capabilities is contained in the Aircraft Tracking Implementation Guidelines *(Cir 347).*

2.2.2 ICAO Annex 6, Part I, 3.5.2

Recommendation.— *The operator should track the position of an aeroplane through automated reporting at least every 15 minutes for the portion(s) of the in-flight operation(s) under the following conditions:*

a) the aeroplane has a maximum certificated take-off mass of over 27 000 kg and a seating capacity greater than 19; and
b) where an ATS unit obtains aeroplane position information at greater than 15 minutes intervals.

Note.— See Annex 11, Chapter 2, for coordination between the operator and air traffic services providers regarding position report messages.

2.2.3 ICAO Annex 6, Part I, 3.5.3

The operator shall track the position of an aeroplane through automated reporting at least every 15 minutes for the portion(s) of the in-flight operation(s) that is planned in an oceanic area(s) under the following conditions:

a) the aeroplane has a maximum certificated take-off mass of over 45 500 kg and a seating capacity greater than 19; and
b) where an ATS unit obtains aeroplane position information at greater than 15 minute intervals.

Note 1.— Oceanic area, for the purpose of aircraft tracking, is the airspace which overlies waters outside the territory of a State.

Note 2.— See Annex 11, Chapter 2, for coordination between the operator and air traffic services providers regarding position report messages.

Note 3.— Operational procedures for monitoring the aircraft tracking information are contained in PANS-OPS, Volume III, Section 10.

2.2.4 ICAO Annex 6, Part I, 3.5.4

Notwithstanding the provisions in 3.5.2 and 3.5.3, the State of the Operator may, based on the results of an approved risk assessment process implemented by the operator, allow for variations to automated reporting intervals. The process shall demonstrate how risks to the operation, resulting from such variations, can be managed and shall include at least the following:

a) capability of the operator's operational control systems and processes, including those for contacting ATS units;
b) overall capability of the aeroplane and its systems;
c) available means to determine the position of, and communicate with, the aeroplane;
d) frequency and duration of gaps in automated reporting;
e) human factors consequences resulting from changes to flight crew procedures; and
f) specific mitigation measures and contingency procedures.

Note.— Guidance on development, implementation and approval of the risk assessment process, which allows for variations to the need for automatic reporting and the required interval, including variation examples, is contained in the Aircraft Tracking Implementation Guidelines *(Cir 347).*

2.2.5 ICAO Annex 6, Part I, 3.5.5

The operator shall establish procedures, approved by the State of the Operator, for the retention of aircraft tracking data to assist SAR in determining the last known position of the aircraft.

Note.— Refer to 4.2.1.3.1 for operator responsibilities when using third parties for the conduct of aircraft tracking under 3.5.

2.3 Aircraft Tracking Function

The AT function of the GADSS provides an automated four-dimensional (4D) (latitude, longitude, altitude and time) position at a reporting interval of 15 minutes or less (recommended in all areas of operation and required in oceanic areas). This standardized reporting interval is intended to ultimately reduce the time necessary to resolve the status of an aircraft or, when necessary, help to locate an aircraft by reducing the search area.

The AT function enhances the ability of RCCs to obtain information on an aircraft in an emergency situation but also to provide information on other aircraft in the area that may be able to assist, for example, to divert to a distress location, relay communications, etc. However, AT responsibilities and actions are typically performed between the ATSU and the aircraft operator.

2.3.1 AT Function and Aircraft Operator

a) 15-minute position reporting

For AT in GADSS, the aircraft operator is required to establish an AT capability throughout its area of operations. Such tracking is required in oceanic areas (airspace which overlies waters outside of the territory and territorial sea of a State) and recommended in all areas of operations. Tracking is accomplished through automated four-dimensional (latitude, longitude, altitude and time) position reports transmitted at an interval of 15 minutes or less, unless ATS surveillance obtains aircraft position information at 15-minute intervals or less.

In addition, obtaining aircraft position data through standardized automated reporting is intended specifically to preclude a negative impact from a human factors perspective on flight crew member workload.

b) Notification to ATSU

Such tracking is undertaken by the aircraft operator in accordance with Annex 6, Part I, aircraft tracking provision to help ensure the availability and sharing of accurate aircraft position data with the appropriate ATSUs. This is important as these ATSUs are responsible for notifying rescue coordination centres (RCCs) when aircraft are considered to be in a state of emergency.

The aircraft operator is required to establish contact with the ATSU whenever there is any doubt as to the safety of the aircraft. In order to ensure standardized communication between the aircraft operator and the appropriate ATSU, an aircraft tracking missed position report message template is shown in Appendix A, this template provides fields for the required information necessary to identify the aircraft, along with the last known position (LKP), altitude and expected next position. Supplementary information, while useful, is not required to be passed and may be appended to the template if available.

c) Retention of data

The requirement 3.5.5 in Annex 6, Part I establishes an operator's aircraft tracking data retention responsibility. The principal intent of the Standard is to ensure the availability of tracking data that would assist SAR in locating an aircraft. Specific requirements for the retention period, means of storage and access are not defined. These are to be established by the aircraft operator and approved by the State of the Operator. In line with the retention of ATSU records in Annex 10 – *Aeronautical Telecommunications*, Volume II – *Communication Procedures including those with PANS status*, a period of at least 30 days would be expected.

d) Resolution of abnormal events

Abnormal events will be defined by the aircraft operator and would typically exclude deviation due to weather. Once an abnormal event is detected, the primary objective of the aircraft operator is to establish communication with the aircraft by any available means. Operators with access to rapid and reliable communications systems will be able to determine the operational state of aircraft much faster than those with less developed communication capabilities. The capability of an operator to communicate with its aircraft, therefore, should be addressed by procedure as it may determine when the assistance and support of an appropriate ATSU will be required. Operator policy, process and procedures related to resolving detected abnormal events should aim to:

i. determine in a timely manner and by any available means, the operational state of the aircraft;
ii. notify the appropriate ATSU;
iii. ensure operators notify the appropriate ATSU immediately should they regain contact with their aircraft;
iv. if achievable, trigger an increased automated position reporting interval; and
v. when an abnormal event is resolved and contact re-established with an aircraft, trigger a return to the normal tracking interval.

When an abnormal event is detected by the aircraft operator and the operational state of the aircraft cannot be determined, the aircraft operator contacts the appropriate ATSU based upon the LKP and expected track of the aircraft. The aircraft operator may use the OPS control directory to obtain the ATSU point of contact. Once the ATSU establishes there may be an emergency, the aircraft operator should make available on request all information which may be of use to the ATSU and/or SAR including aircraft tracking information.

2.3.2 AT Function and ATSU

ATSUs serve as the central point for collecting all information relevant to a state of emergency of an aircraft operating within the flight information region or control area concerned and for forwarding such information to the appropriate RCC. However, ATSUs do not always have direct access to the most recent 4D aircraft position data. By providing aircraft position data when necessary, the aircraft operators can help to improve the effectiveness of ATSU alerting and support SAR.

In the case that the aircraft is operating in an area where the ATSU already receives position reporting at intervals of 15 minutes or less, it is not necessary for the aircraft operator to also receive these reports. The intention is to ensure that either the ATSU or the aircraft operator has a regular, automated position update, which can be used to limit the possible search area should there be any reason to suspect the safety of the aircraft is in doubt.

3. LOCATION OF AN AIRCRAFT IN DISTRESS

3.1 Introduction

This chapter describes the function of the Location of an Aircraft in Distress (ADL) which is used to identify the location of an aircraft in distress with the aim of establishing, to a reasonable extent, the location of an accident site within 6 NM (11 km) radius. This function is performance-based and multiple technology solutions are available, typically referred to as Autonomous Distress Tracking (ADT) system. The ADT system broadcasts aircraft position (latitude and longitude), or signals from which the aircraft position can be derived. The aircraft position information is transmitted, without the need for flight crew action, at least once every minute when an aircraft is in distress condition.

In addition, ADT data needs to be managed and distributed. The Location of an Aircraft in Distress Repository (LADR), which is a centrally managed facility that functions as a single point of access to the ADT position data, has been established as the mechanism to support the distribution of this data. The LADR is described in more detail in Section 6.3.

3.2 SARPs for Location of an Aircraft in Distress

The SARPs for ADL are specified in ICAO Annex 6 – Operation of Aircraft, Part I – International Commercial Air Transport – Aeroplanes, 6.18 – Location of an Aeroplane in Distress, while additional requirements are contained in Appendix 9 to the Annex.

3.2.1 ICAO Annex 6, Part I, 6.18.1

As of 1 January 2025, all aeroplanes of a maximum certificated take-off mass of over 27 000 kg for which the individual certificate of airworthiness is first issued on or after 1 January 2024, shall autonomously transmit information from which a position can be determined by the operator at least once every minute, when in distress, in accordance with Appendix 9.

3.2.2 ICAO Annex 6, Part I, 6.18.2

Recommendation.— *All aeroplanes of a maximum certificated take-off mass of over 5 700 kg for which the individual certificate of airworthiness is first issued on or after 1 January 2023, should autonomously transmit information from which a position can be determined at least once every minute, when in distress, in accordance with Appendix 9.*

3.2.3 ICAO Annex 6, Part I, 6.18.3

The operator shall make position information of a flight in distress available to the appropriate organizations, as established by the State of the Operator.

Note 1.— Refer to 4.2.1.3.1 for operator responsibilities when using third parties.

Note 2.— Operational procedures for monitoring and making position information of a flight in distress available to the appropriate organizations in a timely manner are contained in PANS-OPS, Volume III, Section 10.

3.3 Autonomous Distress Tracking System

The Standard requires that on 1 January 2025 at the latest, all large aeroplanes with an individual certificate of airworthiness (CofA) first issued on or after 1 January 2024, will be equipped with an ADT system.

There are 2 high-level functional objectives for an ADT system. They are to:

a) receive timely notice of an aeroplane in a distress condition to facilitate timely SAR operations; and
b) locate an accident site with high probability after a crash, based on the last known position (LKP) of the aircraft.

An ADT system is composed of a set of elements organized around providing the functional objectives. Different technological solutions are possible. However, all system architectures will include an airborne segment, an air-ground communications link, ground-based systems and terrestrial communications networks.

For the sake of defining functional responsibilities and to generically define requirements that are relevant for any type of ADT system, it is convenient to view the ADT system as 2 subsystems:

a) the operator ADT subsystem which is further divided into:
   i. the airborne segment, which includes the ADT transmitter and any airborne systems that support the ADT system (for example, systems involved in distress detection, such as attitude sensors);
   ii. the ADT service segment; and
b) the information management subsystem.

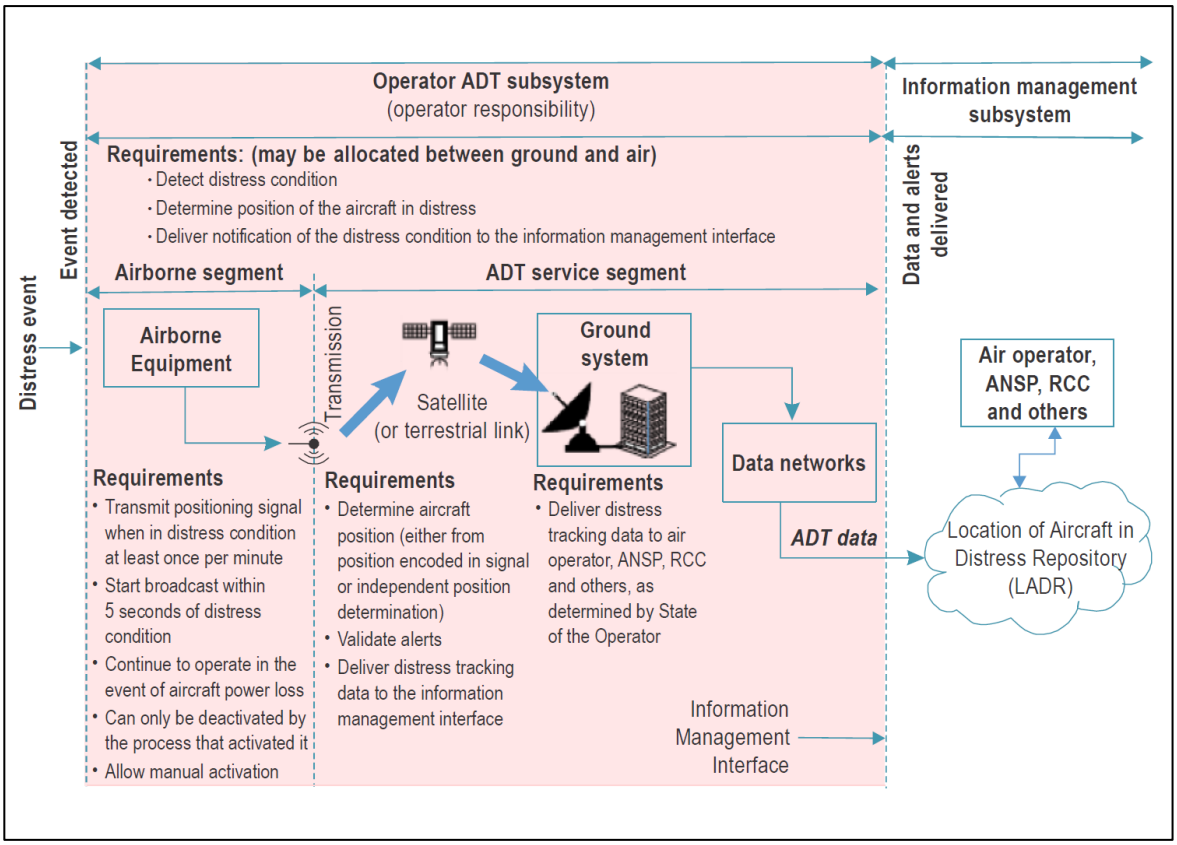

Figure 3-1: ADT subsystem and information management

Table 3-1 lists frequency bands that may be considered for the various categories of functions specified under the GADSS.

Table 3-1: Frequency band use

Function	Spectrum category	Examples of possible radio services and/or technologies that may comply Aircraft
AT	A	MSS (for example, Inmarsat, Iridium) Space-based ADS-B HF data radio
ATC surveillance systems	B	MSS (ADS-C) ADS-B Secondary surveillance radar (SSR)
ADT	C	MSS (for example, Inmarsat, Iridium) Space-based ADS-B Cospas-Sarsat system
Post-end-flight (Focus: rescue)	C	Aeronautical mobile satellite (AMS) MSS Cospas-Sarsat system
Post-end-flight (Focus: recovery)	A	MSS (for example, Inmarsat, Iridium) Cospas-Sarsat system
A: Any type of spectrum properly allocated, on a primary basis, to the function being performed. B: Only a protected aeronautical safety spectrum can be used. C: Only a protected aeronautical safety spectrum, or protected distress spectrum (for example, 406.0 to 406.1 MHz), can be used.		

Note.— This chart is not intended to imply that any new spectrum allocations are necessary to support the GADSS.

3.4 Location of an Aircraft in Distress Function

3.4.1 Implementation of ADT

Several significant functional requirements are necessary to permit the effective implementation of ADT of aircraft in flight, including:

a) detection of a distress condition;

b) autonomous transmission of information from which a position can be determined, including a time stamp. This could take the form of; inter alia, transmitted Global Navigation Satellite System (GNSS) coordinates, or a radio signal which can be triangulated. The system used for this transmission must be capable of transmitting the information in the event of aircraft electrical power loss, at least for the expected duration of the entire flight;

c) a means for the aircraft operator to receive such transmitted position information;

d) validation by the aircraft operator of the distress condition (i.e. it is valid and not the result of a faulty ADT device or some other reason) to avoid unnecessary burdens to SAR services; and

e) a means for the aircraft operator to make the position information of a flight in distress available to the appropriate organizations, as established by the State of the Operator.

3.4.2 Transmission of detection

The reference to "at least once every minute" means that the system must either transmit the position of the aeroplane every minute or transmit sufficient information such that the position can be determined at least every minute. Analysis has shown that in approximately 95 % of aeroplane accident cases surveyed, when the position was accurately known within the last minute prior to the crash, the accident site was located within a 6 NM radius of the LKP.

The initial autonomous transmission by the aircraft must commence immediately no later than 5 seconds after the detection of the activation event. A survey of historical accidents has indicated that, in many cases, very little time had passed between the commencement of the distress event and subsequent crash. A maximum of 5 seconds between the detection of a distress condition and the first triggered transmission will improve the likelihood that at least one transmission occurs before a crash.

3.4.3 Power supply

The term "autonomously" means that no action is required from the flight crew and refers to both the electrical power supply of the ADT equipment and the communication and navigation equipment used to determine and transmit information.

It is intended that ADT can be used to determine the position of an aeroplane in distress using on-board systems in a manner that is resilient to failures of the aeroplane electrical power. No human intervention is required and the aeroplane systems should be designed to ensure a high probability of successful ADT transmission, even in the event of equipment failures that may occur when an aeroplane is in a distress condition.

3.4.4 Triggering event of ADT

An aircraft is in a distress condition when it is in a state that, if the aircraft behavior event is left uncorrected, can result in an accident. EUROCAE document ED-237 Minimum Aviation System Performance Specification for Criteria to detect In-Flight Aircraft Distress Events to trigger Transmission of Flight Information sets out criteria to measure such behavior events and determine when activation of ADT devices is required. For example, triggering criteria of ADT is:

i. unusual attitude;
ii. unusual speed;
iii. collision with terrain;
iv. total loss of thrust or propulsion on all engines; and
v. ground proximity warning.

3.4.5 Position information

The information from which a position can be determined can include:

a) aircraft data containing latitude and longitude; and
b) coded signals that support multilateration or triangulation.

The accuracy of the ADT position information must, at a minimum, meet the position accuracy requirements established for ELTs. Typically, a GNSS-based position encoded ELT can provide position accuracy within 100 m. In addition, it is desirable that the aircraft position provided by the ADT also includes altitude information.

Furthermore, the position information must contain a time stamp. The time reported in the time stamp should be the time when the aeroplane was at the position determined from the transmitted information.

3.4.6 Sequence of events

A simplified schematic timeline for an emergency situation is shown at Figure 3-2 to illustrate the sequence of events occurring when an ADT device is activated.

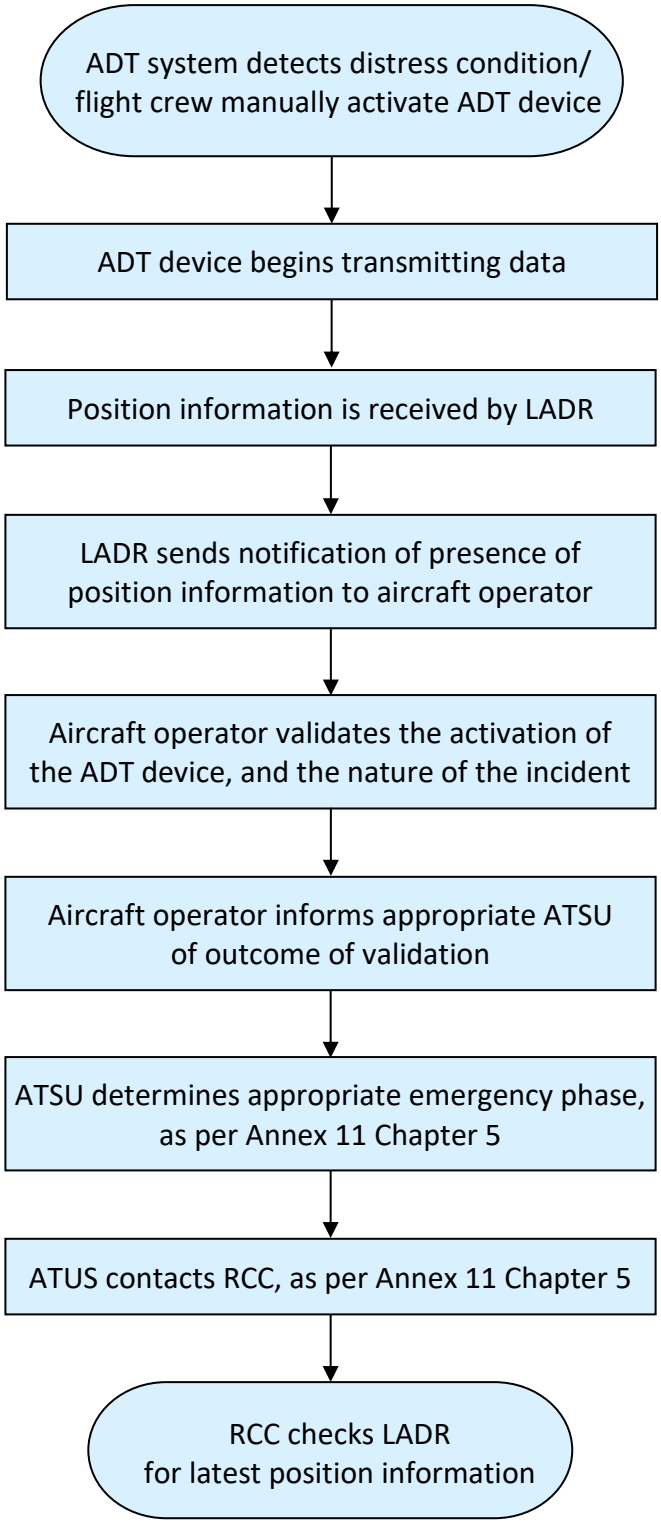

Figure 3-2: Schematic Sequence of Events Arising from an ADT Device Activation

3.5 ADT and SAR service provider

For SAR service provider, as RCC, an ADT is another means of notification that an aircraft in flight might be in distress. The RCC will greatly benefit from ADT, which enables the timely detection of an aeroplane in distress and provides the LKP of the aeroplane. Current ATSU provides alerting service under the provisions of Annex 11 and RCC processes are established under the provisions of Annex 12. The alerting process for the RCC will not fundamentally change with the implementation of ADT.

The information flow associated with ADT, based on Annex 11, Chapter 5, can be summarized as follows:

a) if ATSU detects an aeroplane in distress, they will notify RCC and the aircraft operator;
b) if operator detects an aeroplane in distress, they will notify the ATSU who will in turn notify the RCC;
c) if an ELT (other than an ELT(DT)) is activated the RCC will be notified via the Cospas-Sarsat system and will subsequently notify the ATSU;
d) if the ADT device is activated, it will send information to the LADR which will subsequently notify all relevant subscribers that position information is in the LADR; and
e) if an ELT(DT), which is an ADT device, is activated, it will also send a Cospas-Sarsat formatted message to the responsible RCC.

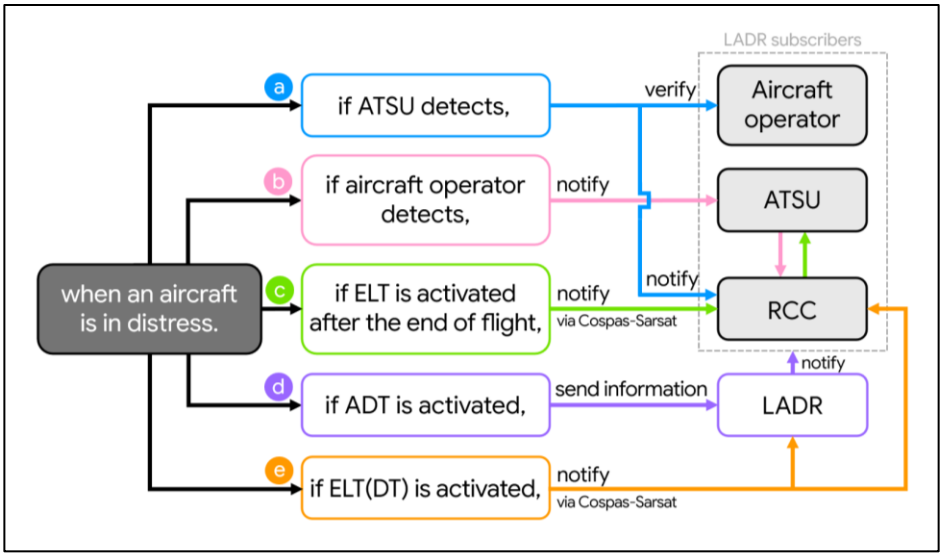

Figure 3-3: The information flow associated with ADT

The requirements of the ADL Standards, and the use of the LADR as a centralized system, are not primarily intended to act as an alerting system. Notifications sent from either the ADT service provider, or from the LADR itself, fulfil the requirement in Annex 6 to "alert" the operator. When considering the need for an acceptably low rate of false alerts, this is intended to ensure that SAR personnel do not receive spurious alerts.

EUROCAE ED-237, based on input from SAR service providers regarding additional false alerts due to the introduction of the in-flight activation logic, has defined that the overall in-flight event detection and triggering system should meet a nuisance rate objective of no more than two nuisance triggers per 100 000 flight hours.

3.6 Utilizing ELT (DT) to locate aircraft in distress

The International Cospas-Sarsat Programme is a satellite-aided SAR initiative organized as a treaty-based, non-profit, intergovernmental, humanitarian cooperative of 45 States and agencies. Conceived and initiated by Canada, France, the United States, and the former Soviet Union in 1979, it is dedicated to detecting and locating radio beacons activated by persons, aircraft or vessels in distress, and forwarding this alert information to authorities that can take action for rescue.

The Cospas-Sarsat System utilizes a network of satellites that provides global coverage. Distress alerts are detected, located and forwarded to over 200 countries and territories at no cost to beacon owners or the receiving government agencies. Since the first rescue using Cospas-Sarsat technology in September 1982, the Cospas-Sarsat System has provided assistance in rescuing more than 60,000 persons in more than 20,000 SAR events.

Specifications for the Distress Tracking ELT (ELT(DT)) have been developed by the International Cospas-Sarsat Programme. These specifications allow aircraft operators to comply with the ICAO provisions by utilizing either manual activation of the ELT(DT) by flight crew, or automatic activation of the ELT(DT) when a distress condition is detected.

Notification of the activation of the ELT(DT) and other associated information will be automatically transmitted via the Cospas-Sarsat Space and Ground Segments directly to relevant RCCs, and automatically sent to the LADR. This dual delivery may result in RCCs being notified of the same event by multiple means.

As well as the standard information transmitted in any ELT alert, Cospas-Sarsat will include in the ELT(DT) message sent to RCCs and the LADR the three-letter designator for the aircraft operating agency, aircraft position and level, and whether the device was triggered manually or automatically, in compliance with the specifications of the LADR. The age of the latest position report received will also be provided; e.g. “position 23-34.44N 070-33.55W is less than 1 minute old”.

3.6.1 ELT(DT) Characteristics

The key characteristics of ELT (DT) are:

a) new ICAO standard effective January 2025;
b) mandatory on all commercial aircraft;
c) programmable trigger in-flight capability;
d) detects imminent distress situations;
e) automatically sends secure 406 MHz distress signal;
f) autonomously tracked by airline company; and
g) features Return Link Command Service.

For example, ELT(DT) possible triggering effects are:

i. unusual attitude;
ii. unusual speed;
iii. unusual altitude;
iv. total loss of propulsion;
v. transponder emergency codes;
vi. fire;
vii. depressurization;
viii. manual activation by crew; and
ix. manual remote activation from ground through Return Link Signal (RLS).

3.6.2. ELT(DT) Functions

ELT(DT) operates using aircraft power, with an independent backup power supply in case of aircraft electrical failure. The specified duration of autonomous operation of ELT(DT) is a minimum of 370 minutes while using an independent power supply, and it will transmit a message with encoded location information at the following intervals:

a) every 5 seconds for the first 2 minutes following activation;
b) every 10 seconds after 2 minutes until 5 minutes following activation; and
c) every 30 seconds after 5 minutes following activation.

An ELT(DT) may also include the following capabilities:

a) for an ELT(DT) that is crash survivable, sufficient battery life to provide at least 370 minutes of in-flight transmission within a total of 24 hours of transmission of 406 MHz messages, and 48 hours of 121.5 MHz direction-finding signal transmissions; or
b) for an ELT(DT) combined with the function of an ELT(AF) (automatic fixed), an ELT(AP) (automatic portable), or an ELT(AD) (automatic deployable), sufficient battery life to provide at least 370 minutes of in-flight transmission plus 24 hours of post-crash transmission of 406 MHz messages, and 48 hours of 121.5 MHz direction-finding signal transmissions.

3.6.3 ELT(DT) Data distribution

When an aircraft is in distress condition, ELT(DT) data will be distributed as follows:

a) upon activation, the ELT(DT) transmits a 406 MHz distress alert signal which is received on the spacecraft (LEOSAR, MEOSAR, GEOSAR) that is a part of the Cospas-Sarsat satellite space segment;
b) the signal is re-transmitted to ground station(s), the local user terminal (LUT) of the Cospas-Sarsat ground segment;
c) the LUT extracts the beacon message and sends the alert data to its associated mission control centers (MCCs), the source MCC, the nodal MCC(s) and the destination MCC subsequently;
d) while the nodal MCC(s) also send the alert data to LADR which will subsequently notify all relevant subscribers; and
e) the destination MCC sends this alert data to the responsible RCC, which may subsequently coordinate with ATSU and the aircraft operator, as necessary.

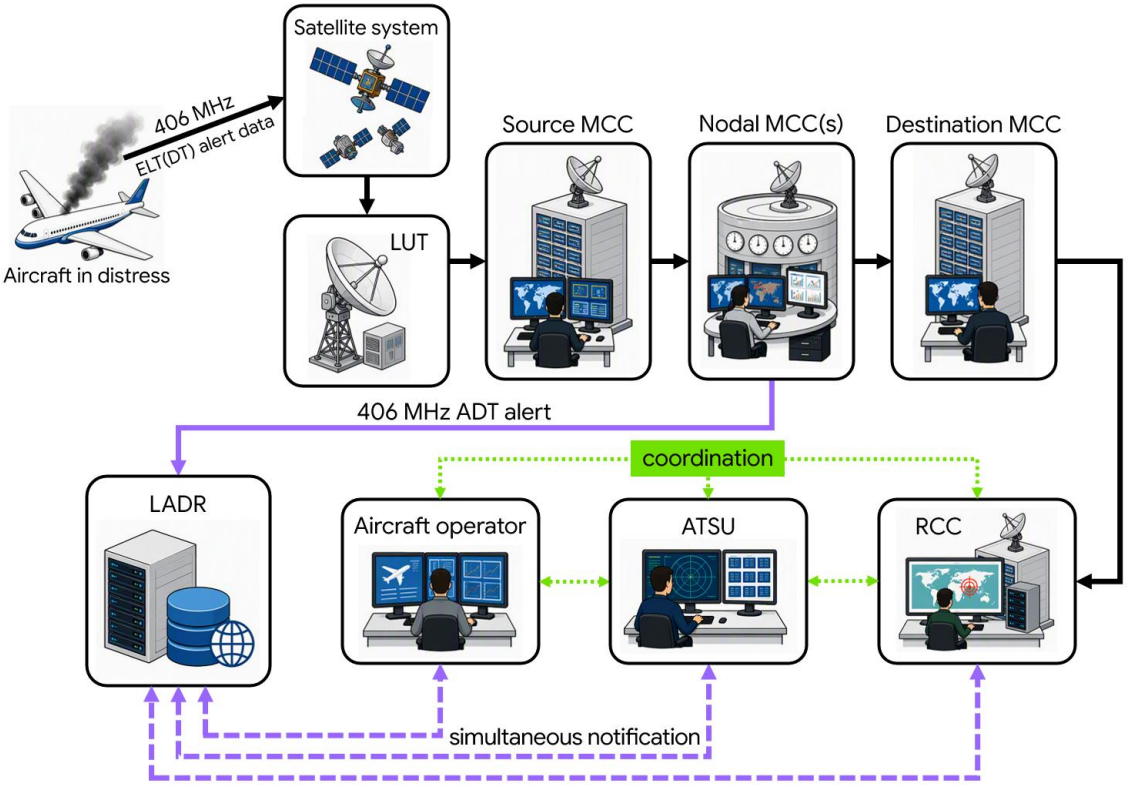

Figure 3-4: ELT(DT) data distribution

Intentionally Left Blank

4. POST FLIGHT LOCALIZATION

4.1 Introduction

This chapter describes the function of Post Flight Localization (PFL). When an accident occurs, there is a phase beginning immediately after the end of flight where the rescue of possible survivors has the immediate and highest priority. Accurate aircraft position information is provided through the post flight localization (PFL) function by means of an emergency locator transmitter (ELT) and/or homing signals to guide SAR services to the site. To assist the localization of the wreckage, the PFL and recovery function specifies a number of requirements for Emergency Locator Transmitters (ELTs) and Underwater Locating Devices (ULDs).

4.2 SARPs for Post Flight Localization

The SARPs for PFL are specified in ICAO Annex 6 - Operation of Aircraft, Part I – International Commercial Air Transport – Aeroplanes, 6.17 – Emergency Locator Transmitter (ELT).

4.2.1 ICAO Annex 6, Part I, 6.17.1

Recommendation.— *All aeroplanes should carry an automatic ELT.*

4.2.2 ICAO Annex 6, Part I, 6.17.2

Except as provided for in 6.17.3, all aeroplanes authorized to carry more than 19 passengers shall be equipped with at least one automatic ELT or two ELTs of any type.

4.2.3 ICAO Annex 6, Part I, 6.17.3

All aeroplanes authorized to carry more than 19 passengers for which the individual certificate of airworthiness is first issued after 1 July 2008 shall be equipped with either:

a) at least two ELTs, one of which shall be automatic; or
b) at least one ELT and a capability that meets the requirements of 6.18.

Note.— In the case where the requirements for 6.18 are met by another system no automatic ELT is required.

4.2.4 ICAO Annex 6, Part I, 6.17.4

Except as provided for in 6.17.5, all aeroplanes authorized to carry 19 passengers or less shall be equipped with at least one ELT of any type.

4.2.5 ICAO Annex 6, Part I, 6.17.5

All aeroplanes authorized to carry 19 passengers or less for which the individual certificate of airworthiness is first issued after 1 July 2008 shall be equipped with at least one automatic ELT.

4.2.6 ICAO Annex 6, Part I, 6.17.6

ELT equipment carried to satisfy the requirements of 6.17.1, 6.17.2, 6.17.3, 6.17.4 and 6.17.5 shall operate in accordance with the relevant provisions of Annex 10, Volume III.

Note.— The judicious choice of numbers of ELTs, their type and placement on aircraft and associated floatable life support systems will ensure the greatest chance of ELT activation in the event of an accident for aircraft operating over water or land, including areas especially difficult for search and rescue. Placement of transmitter units is a vital factor in ensuring optimal crash and fire protection. The placement of the control and switching devices (activation monitors) of automatic fixed ELTs and their associated operational procedures will also take into consideration the need for rapid detection of inadvertent activation and convenient manual switching by crew members.

4.3 Post Flight Localization Function

4.3.1 Emergency Locator Transmitter

The primary purpose of an ELT installed on an aircraft is to locate survivors, however, it may also aid the localization and recovery of wreckage, the ELT is one of 3 types of 406 MHz distress beacons:

i. the maritime emergency position-indicating radio beacon (EPIRB) which is part of the Global Maritime Distress and Safety System (GMDSS);
ii. the aeronautical ELT; and
iii. the personal locator beacon (PLB).

All 3 types of this distress beacon have their signals relayed via Cospas–Sarsat satellites, local user terminals (LUTs) and mission control centers (MCCs) to SAR points of contact (SPOCs) which include RCCs.

ELTs transmit an encoded message on 406 MHz, which is detected by the Cospas-Sarsat satellite constellation. Detected messages are passed to a ground station, then on to a local search and rescue (SAR) authority responsible for the area where the signal was detected, and then to the SAR authority associated with the country code of the beacon. The country where the ELT is registered is also notified. ELTs can provide location information either by trilateration, doppler effect or through encoded global navigation satellite system (GNSS) position data. ELTs also transmit a signal at 121.5 MHz, which is used by SAR units to home in on the location of an active device.

The types of ELTs and carriage requirements on aircraft are specified in ICAO Annex 6 provisions, there are 4 types of ELTs:

a) **Automatic fixed ELT, ELT(AF)**: This type of ELT is permanently attached to the aircraft and automatically activates upon a crash. This type of ELT will lead SAR units to the accident site.

b) **Automatic portable ELT, ELT(AP)**: This type of ELT is intended to be rigidly attached to the aircraft and automatically activates upon a crash but can be removed by persons after the accident. This type of ELT will lead SAR units to the accident site or to survivors if it is detached and carried away.

c) **Automatic deployable ELT, ELT(AD) and automatic deployable flight recorder, ADFR**: An ELT(AD) or ADFR with integrated ELT(AD) is attached to the aircraft and automatically deploys during a crash or ditching. The device is designed to float if it deploys into water. These types of ELTs provide information from which the point of end of flight can be determined after they are deployed. These types of ELTs can lead SAR units to the accident site. An integrated ELT(AD) within an ADFR is crash survivable in accordance with EUROCAE ED-112a/b and has an extended 121.5 MHz homing requirement of 150 hours.

d) **Survival ELT, ELT(S)**: This is a portable type of ELT intended to be removed from the aircraft after a crash and manually activated by survivors or automatically activated with the deployment of other survival equipment such as a life raft. This type of ELT is intended to aid SAR units in locating survivors.

The ELT distress tracking (ELT(DT)) is an autonomous distress tracking (ADT) device, designed to transmit when the aircraft is in a distress condition. ELT(DT)s can be designed to act like an ELT(AF) after an aircraft crashes or ditches, continuing to transmit location information and commencing a 121.5 MHz homing signal, however the basic ELT(DT) is not considered to be an ELT device. Compliance with PFL requires at least one automatic ELT to be installed.

Signals from 121.5 MHz and 243.0 MHz ELTs and EPIRBs may also be relayed by aircraft in flight via an ATSU, but signals from these beacons are not processed by satellites and are not part of GMDSS. This old style ELT depends on other aircraft or airport facilities to detect its aural signal. All 406 MHz distress beacons are electronically similar, the main differences being construction, activating mechanisms and slight differences in coding protocols.

Users of ELTs need to be made aware how to properly install, register, and use this equipment and of what happens when these devices are activated. They should understand that these are the alerting means of last resort and should not be depended upon to replace two-way communications as the primary means of alerting.

In the original (LEOSAR) Cospas-Sarsat system, signals from 406 MHz distress beacons can be stored aboard a satellite and relayed to ground later if no LUT receiver is immediately within view of the satellite, enabling the system to operate in a global mode with fewer LUTs required. In the MEOSAR system which will augment the Cospas-Sarsat System, the signal from a 406 MHz distress beacon will be relayed through multiple satellites and received by an extensive network of LUTs providing near instantaneous notification and location of distress events.

4.3.2 Underwater Locating Device

To aid the location of an aircraft wreckage under water in oceanic areas, an underwater locating device (ULD) operating at a frequency of 8.8 kHz is attached to the airframe to locate aeroplane wreckage below the surface of water when an ELT signal is not possible to detect. In addition, non-deployable crash-protected flight recorder must have securely attached an automatically activated ULD operating at a frequency of 37.5 kHz and capable of operating for a minimum of 90 days.

Intentionally Left Blank

5. FLIGHT RECORDER DATA RECOVERY

5.1 Introduction

This chapter describes the function of Flight Recorder Data Recovery (FRDR). To ensure accident investigation authorities (AIA) obtain timely access to the flight recorder information, new types of large aircraft will have to be equipped with a means to recover the FRD and make it available in a timely manner. The retrieval of flight recorder information contributes to, and often accelerates, determination of the probable cause of the accident.

5.2 SARPs for Flight Recorder Data Recovery

The SARPs for FRDR are specified in ICAO Annex 6 - Operation of Aircraft, Part I – International Commercial Air Transport – Aeroplanes, 6.3.5 – Flight recorders — general and 6.3.6 – Flight recorder data recovery.

5.2.1 ICAO Annex 6, Part I, 6.3.5.1

Construction and installation

Flight recorders shall be constructed, located and installed so as to provide maximum practical protection for the recordings in order that the recorded information may be preserved, recovered and transcribed. Flight recorders shall meet the prescribed crashworthiness and fire protection specifications.

5.2.2 ICAO Annex 6, Part I, 6.3.5.2

Operation

6.3.5.2.1 Flight recorders shall not be switched off during flight time.

6.3.5.2.2 To preserve flight recorder records, flight recorders shall be deactivated upon completion of flight time following an accident or incident. The flight recorders shall not be reactivated before their disposition as determined in accordance with Annex 13.

Note 1.— The need for removal of the flight recorder records from the aircraft will be determined by the investigation authority in the State conducting the investigation with due regard to the seriousness of an occurrence and the circumstances, including the impact on the operation.

Note 2.— The operator's responsibilities regarding the retention of flight recorder records are contained in 11.6.

5.2.3 ICAO Annex 6, Part I, 6.3.5.3

Continued serviceability

Operational checks and evaluations of recordings from the flight recorder systems shall be conducted to ensure the continued serviceability of the recorders.

Note.— Procedures for the inspections of the flight recorder systems are given in Appendix 8.

5.2.4 ICAO Annex 6, Part I, 6.3.5.4

Flight recorder electronic documentation

Recommendation.— *The documentation requirement concerning FDR and ADRS parameters provided by operators to accident investigation authorities should be in electronic format and take account of industry specifications.*

Note.— Industry specification for documentation concerning flight recorder parameters may be found in the ARINC 647A, Flight Recorder Electronic Documentation*, or equivalent document.*

5.2.5 ICAO Annex 6, Part I, 6.3.5.5

Combination recorders

6.3.5.5.1 **Recommendation.**— *All aeroplanes of a maximum certificated take-off mass of over 5 700 kg for which the application for type certification is submitted to a Contracting State on or after 1 January 2016, and which are required to be equipped with both a CVR and an FDR, should be equipped with two combination recorders (FDR/CVR).*

6.3.5.5.2 All aeroplanes of a maximum certificated take-off mass of over 15 000 kg for which the application for type certification is submitted to a Contracting State on or after 1 January 2016, and which are required to be equipped with both a CVR and an FDR, shall be equipped with two combination recorders (FDR/CVR). One recorder shall be located as close to the cockpit as practicable and the other recorder located as far aft as practicable.

6.3.5.5.3 **Recommendation.**— *All aeroplanes of a maximum certificated take-off mass over 5 700 kg, required to be equipped with an FDR and a CVR, may alternatively be equipped with two combination recorders (FDR/CVR).*

Note.— The requirement of 6.3.4.5 may be satisfied by equipping the aeroplanes with two combination recorders (one forward and one aft) or separate devices.

6.3.5.5.4 **Recommendation.**— *All multi-engined turbine-powered aeroplanes of a maximum certificated take-off mass of 5 700 kg or less, required to be equipped with an FDR and/or a CVR, may alternatively be equipped with one combination recorder (FDR/CVR).*

5.2.6 ICAO Annex 6, Part I, 6.3.6.1

All aeroplanes of a maximum certificated take-off mass of over 27 000 kg and authorized to carry more than nineteen passengers for which the application for type certification is submitted to a Contracting State on or after 1 January 2021, shall be equipped with a means approved by the State of the Operator, to recover flight recorder data and make it available in a timely manner.

5.2.7 ICAO Annex 6, Part I, 6.3.6.2

In approving the means to make flight recorder data available in a timely manner, the State of the Operator shall take into account the following:

a) the capabilities of the operator;
b) overall capability of the aeroplane and its systems as certified by the State of Design;
c) the reliability of the means to recover the appropriate CVR channels and appropriate FDR data; and
d) specific mitigation measures.

Note.— Guidance on approving the means to make flight recorder data available in a timely manner is contained in the Manual on Location of Aircraft in Distress and Flight Recorder Data Recovery *(Doc 10054).*

5.3 Flight Recorder Data Recovery Function

The requirements for FRDR are contained in Annex 6, Part I, 6.3.6. This presents a performance-based Standard for aeroplanes over 27 000 kg (and authorized to carry more than 19 passengers) to be equipped with a means to recover flight recorder data (FRD) and make it available in a timely manner.

The objective of FRDR is to enable and support the early identification of safety issues and avoid accident investigation delays such as those caused by prolonged search operations. The availability of FRD soon after an accident, with enough information to provide an indication of what events may have led to the accident, is crucial for the early identification of safety issues and the implementation of appropriate preventative safety actions.

The FRDR may also facilitate the location of accident sites and consequently shorten the duration of any subsequent underwater search and recovery that may be required. The timely recovery of FRD may also make the retrieval of wreckage and fixed flight recorders less urgent or unnecessary for accident investigation purposes.

The intent is for authorities to recover data without the use of underwater searches or prolonged terrain searches. It is expected that FRD is recovered and made available to the appropriate AIA without unnecessary delays (for example, delays due to technical, legal, authorization-related or personnel-related issues).

According to Annex 6, Part I, the term “flight recorder” refers to any type of recorder installed in the aircraft for the purpose of complementing accident/incident investigations. Crash-protected flight recorders are comprised of one or more of the following systems:

a) flight data recorder (FDR);
b) cockpit voice recorder (CVR);
c) flight crew-machine interface recording (FCMIR); and
d) data link recorder (DLR).

5.3.1 Flight Data Recorder

All flight data recorders (FDRs) must retain the information recorded during at least the last 25 hours of their operation, and in addition, sufficient information from the preceding take-off for calibration purposes.

The required FDR parameters to be recorded as listed in Annex 6, Part I, Appendix 8, depend on the date of the individual certificate of airworthiness of each aeroplane and have been established based on accident investigation experience accumulated since the 1960s. Most parameters in this list have been subject to specific safety recommendations. This list is kept up-to-date to reflect evolving aviation technology.

5.3.2 Cockpit Voice Recorder

All audio signals required to be recorded by a cockpit voice recorder (CVR) according to Annex 6, Part I, should be considered priority for the timely recovery of FRD. However, if this is not achievable with potential technological constraints or bandwidth limitations, at a minimum the two audio channels mentioned in Annex 6, Part I, 6.3.6.2 should be transmitted.

All CVRs must retain the information recorded during at least the last 2 hours of their operation. In addition, all aeroplanes of a maximum certificated take-off mass of over 27 000 kg for which the individual certificate of airworthiness is first issued on or after 1 January 2022 shall be equipped with a CVR which must retain the information recorded during at least the last 25 hours of its operation.

An alternate power source must automatically engage and provide 10 minutes, plus or minus one minute, of operation whenever aeroplane power to the recorder ceases, either by normal shutdown or by any other loss of power. The alternate power source must power the CVR and its associated cockpit area microphone components. The CVR must be located as close as practicable to the alternate power source.

5.3.3 Automatic deployable flight recorder

The Automatic deployable flight recorder (ADFR) is a type of flight recorder which contains memory media for the storage of the required FRD and storage of other optional data. In accordance with EUROCAE ED-112A, the ADFR records data from all sources in its crash-survivable memory for the entire duration of the flight. An ADFR continuously records all data sent to it via its interface to the aircraft avionics system. Recording is self-overwriting. The memory is non-volatile and crash-survivable, and thus any information stored before aircraft power is lost remains in storage.

An ADFR is designed to be deployed upon the detection of impact or water immersion. It is designed to separate from the zone of exposure effects (e.g. fire) and to float (the unit is buoyant).

A fundamental requirement of ADFR technology is the integration of an automatic deployable emergency locator transmitter (ELT(AD)). Updates of position information provided by the integrated ELT enables tracking of the ADFR buoyant unit as it drifts. The tracking capability provides essential information to SAR authorities, including drift over time, to aid in the location and recovery of potential survivors.

An accident investigation and root cause analysis may be launched immediately after the ADFR unit has been found and its flight recorder data have been retrieved. It is assumed that the ADFR unit could be found during the same time period as the SAR mission (approximately 150 hours or 6 days).

6. GADSS INFORMATION MANAGEMENT

6.1 Introduction

GADSS information management is the infrastructure and services used for the exchange and timely dissemination of information in support of the GADSS.

An important aspect of the GADSS concept is facilitating timely access to information. Access to this information is intended to improve communication between stakeholders when dealing with aircraft tracking and distress condition events, and to ensure the most up-to-date position information is available to all stakeholders from a centralized data source.

In addition to providing the means to save and distribute this data, a key element of the GADSS is the protections and safeguards on accessing and modifying this data, as this ensures the users continue to have confidence in both the supply and use of the data, there are 2 types of information used by GADSS:

a) contact information for stakeholders: information intended to facilitate contact between various stakeholders in the event of an accident or incident occurring, this is held in the OPS control directory, as described in 6.4; and

b) aircraft position information: information related to the position information of an aircraft derived either from routine aircraft tracking (see Chapter 2) or from distress tracking (see Chapter 3).

This chapter describes the Location of an Aircraft in Distress Repository (LADR) and OPS Control Directory (OPS CTRL).

6.2 SARPs for Location of an Aircraft in Distress Repository and OPS Control Directory

The SARPs for LADR and OPS CTRL are specified in ICAO Annex 12 – Search and Rescue, 2.3 – Rescue coordination centers and rescue subcenters.

6.2.1 ICAO Annex 12, 2.3.6

Each rescue coordination center and, as appropriate, rescue subcenter shall maintain up-to-date contact details in the OPS Control Directory.

6.2.2 ICAO Annex 12, 2.3.7

Each rescue coordination center and, as appropriate, rescue subcenter shall subscribe and maintain access to the location of an aircraft in distress repository (LADR).

Note. — Guidance on the use of the OPS Control Directory and the LADR is contained in the Manual on Global Aeronautical Distress and Safety System (GADSS) *(Doc 10165).*

6.3 Location of an Aircraft in Distress Repository

The GADSS concept identifies the desirability of a central repository as the single point of access for position information of an aircraft in distress. As the concept has matured, the central repository has been defined as the Location of an Aircraft in Distress Repository (LADR).

The LADR has been developed by the European Organisation for the Safety of Air Navigation (EUROCONTROL), in close cooperation with ICAO. The link is redirected to the LADR hosted by EUROCONTROL.

6.3.1 LADR Stakeholder

There are 3 main categories of LADR stakeholders:

a) LADR administrator;
b) LADR contributors (data providers to LADR) inclusive of developmental submitter; and
c) LADR data users (data consumers to LADR).

An individual entity may fit into one or more of the above stakeholders (e.g. an airline may be a LADR contributor and also a LADR data user).

The figure 6-1 below shows how the LADR fits in the context of the full ADT system, and the links to stakeholders.

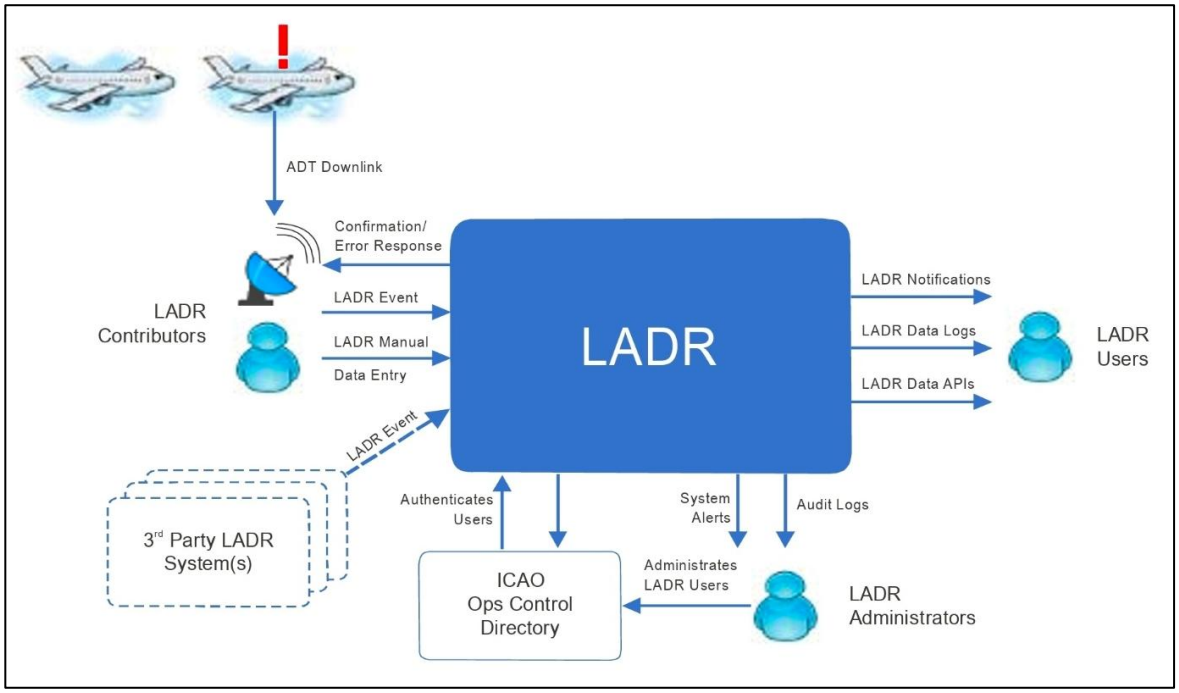

Figure 6-1: LADR Integration with Stakeholders

6.3.2 LADR Administrator

The LADR administrator will be ICAO. Effective daily activities for accreditation, monitoring, maintenance and any other working aspects may be delegated to an organization authorized by ICAO which will “host” all above activities on the organization’s behalf.

For administrative details such as the accreditation of a new user, the LADR administrator or delegated responsible organization will be available during regular working hours of the State in which they are located.

For technical issues related to access and use of the LADR, the LADR administrator, or delegated responsible organization, will be available 24 hours a day, 7 days a week and be required to address issues related to availability of the repository and access by accredited users. Actual response times for issues and database unavailability will need to be defined in a service-level agreement with the delegated responsible organization once this has been decided.

The LADR administrator will establish criteria to approve contributors and determine the information available to each user profile.

6.3.3 LADR Contributors

LADR contributors will be those organizations who:

a) have ADT solutions that have been approved for use by a State;
b) are able to provide data to the LADR in accordance with the requirements defined by the LADR administrator; and
c) have been properly accredited.

Potential LADR contributors will be designated as developmental submitters until they can demonstrate that appropriate quality systems can verify the accuracy and integrity of the provided data.

LADR contributors should have policies and procedures to ensure that the data they submit is received and processed by the LADR. These include appropriate actions when notification of a “rejected”, “incomplete” or “duplicate” message is received from the LADR. The policies and procedures should also include a periodic verification that the submitted information is being processed correctly by the LADR.

A LADR contributor will need to provide evidence that it supports an ADT system approved by a State and that it meets the LADR requirements. The accreditation process may follow the following sequence of events:

a) a State informs ICAO that it is undergoing the approval process of an ADT system and wishes that the LADR establishes the organization as a developmental submitter;
b) the LADR administrator provides all necessary documentation to fully specify the required data, formats and procedures for ADT data submissions;
c) the LADR administrator runs a verification test to ensure that the contributor, in developmental submitter mode, meets the LADR requirements for data submissions;
d) once the verification tests are successfully completed, the LADR administrator will set up the system to allow the contributor to submit data and monitor data submissions; and
e) once all requirements are met to the satisfaction of the LADR administrator, it informs the respective Member State of the suitability of the ADT system. The LADR administrator will also issue an accreditation to the ADT provider as a contributor.

Contributors will automatically obtain user status. The initial accreditation is granted based on meeting the requirements of the LADR and successful testing and verification of the system. Subsequent changes to an ADT system that impact the connection to the LADR would need to be documented and submitted for re-accreditation, demonstrating the results of testing that has been conducted to ensure ongoing compatibility.

6.3.4 LADR Data Users

LADR users are individuals that are associated with a LADR accredited entity. All user access to the LADR will be read-only. User access and available information will be subject to the entity type profile and the privileges granted by the particular accredited entity.

Table 6-1: Access to data by user type

Entity (user) type profile	Domain of data available to users
Aircraft operator	All ADT data for the operator's own aircraft, identified by the operator's three-letter designator code.
ANSP, as ATSU	All ADT data for aircraft within the flight information region (FIR) for which the unit is responsible. Additionally, any event that starts, is active or terminates within the FIR should be fully visible to the ATSU responsible for the FIR (including the data points that are outside of the FIR).
SAR Service Provider, RCC	All ADT data in the LADR.
Others, as established by the State of the Operator	Partial or all ADT data for aircraft associated with air operators of the particular State of the Operator.
Contributor	All ADT data submitted by the particular contributor.

An accredited entity will have one or more super users and as many users as deemed appropriate. Super users will manage their own users and will be able to establish criteria, within the domain of the entity type profile, and options that their users can flag to get notifications. An accredited entity will need to have at least one super user that will act as the focal point for the LADR administrator.

Users will be approved and registered in the LADR by the super user. Users will be able to see the ADT data based on the corresponding entity type profile.

ICAO will accredit entities that will, in turn, accredit users. When an entity seeks ICAO accreditation to access the LADR, it will need to nominate at least one super user that will serve as the LADR focal point.

Table 6-2: Requirements for user accreditation

Entity	Requirement
Aircraft operator	– Be listed in Designators for Aircraft Operating Agencies, Aeronautical Authorities and Services (Doc 8585). – Maintain updated agency (operator) operational control contact information with ICAO.
ANSP, as ATSU	– Manage at least one ATSU. – Have ATSUs listed in Location Indicators (Doc 7910). – Maintain updated ATSU operational control contact information with ICAO.
SAR Service Provider, as RCC	– Be listed in the Cospas-Sarsat MCC/RCC database. – Maintain an updated RCC operational control contact information with ICAO.
Others, as established by the State of the Operator	– Additional users which the State of the Operator requires to have access will need to be specifically identified by the State of the Operator.

An entity that meets the requirements in Table 6-2 and is seeking ICAO LADR accreditation will need to submit an official request to the LADR administrator. The request will indicate the contact details of the super user (focal point) and as applicable, assurance that the relevant ICAO operational contact database is up to date.

An entity and all users associated with that entity will retain accreditation for as long as the eligibility requirements in Table 6-2 remain valid.

6.3.5 Access to information by stakeholders

Information regarding the LADR is protected to ensure it is only available to individuals and organizations with a legitimate need to access it. Access is provided to the data in accordance with the user profile which is established when the account is created.

Each organization (the aircraft operator, ATSU, RCC) must specify a focal point who will be responsible for providing (and maintaining) the organization's information (contact details) within LADR and the associated OPS control directory, as well as authorizing additional users to view the data within the system.

User authentication is managed by the ICAO DNA platform; therefore, to access the LADR, it is necessary to create an account via the DNA portal at https://www4.icao.int/dna. The DNA account must be created using the same email address used to request LADR access from ICAO, since the two requests will need to be matched to allow for access to the system. To obtain an account in the LADR, a request must be sent to the state representative at email address: apiwat.t@caat.or.th for coordination with EUROCONTROL (aircrafttracking@icao.int), the details presented in Table 6-3.

Table 6-3: Information requirements for LADR access

User category	Focal point information	Organizational information
Aircraft operator	Full name and Email address	– three-letter designator(s) code in use by the operator – telephony designator(s) in use by the operator – operator name
ANSP, as ATSU		– four-letter location indicator of FIR(s) – name(s) of FIR(s) managed by the ATSU
SAR Service Provider, as RCC		– RCC name and four-letter location indicator of SRR (if available)
State representative (CAAT/OPS)		– State name

Further information may be required to validate the user and ensure that they are eligible to access the LADR. This will be communicated directly to the focal point as required.

Once a user has gained access to the LADR, further restrictions are in place to prevent access to commercially sensitive data. The ability to see distress events and to access operational contact information in the OPS control directory is determined by the user profile. Table 6-3 provides details on user access to data.

The information held in the LADR should be sufficient to positively identify the aircraft and provide the LKP to all users (ATSUs, aircraft operators, RCCs and any other as defined by the State).

Table 6-4: The information held in LADR

Minimum information in LADR	Additional information to assist SAR
a) latitude; b) longitude; c) date and time (both transmission and receipt); d) operator three-letter designator code; and e) aircraft identification (aircraft nationality and registration mark, 24-bit address, flight number, etc.).	a) altitude; b) ground speed; c) heading; d) ELT Hex ID (that is, a unique digital code programmed into every ELT containing a 406 MHz transmitter); and e) activation method of the ADT system (manual, automatic, etc.)

A notification will be issued to a LADR data user when ADT data meets the requirements of a LADR data user 'filter', as defined in the LADR user profile.

The notification will be triggered by the first received position from an activated ADT system, and the system should not normally send notifications for each position report received from the device. Where an aircraft in distress transits from one FIR to a second (and any subsequent) FIR, a new notification will be triggered for the second (and subsequent) FIRs.

Notifications may be provided using the following means:

a) e-mail;
b) SWIM compliant notification to LADR data users;
c) short message service (SMS); and
d) ATS message over aeronautical fixed telecommunication network (AFTN).

LADR data users will typically have the option to subscribe to notifications. Aircraft operators will be required to receive notifications regarding activation of an ADT system on their aircraft in order to comply with the requirement to be notified if an aircraft is in distress, as specified in Annex 6, Part I, Appendix 9.

LADR data users will receive notifications depending on the type of user account, according to Table 6-5.

Table 6-5: User notification restrictions

User Account Type	Notification options
Aircraft operator	Limited to operators own aircraft.
ANSP, as ATSU	Events which start, are active or terminate within the FIR managed by the ANSP. *Note. — Data for an event which originated outside the FIR but terminated within the FIR will still be accessible, according to Table 6-2*
SAR service provider, as RCC	No limitation, but option to filter based on SAR region (SRR).
State of the Operator	Any events relating to aircraft associated with operators of the State of the Operator.

6.4 OPS Control Directory

The OPS Control Directory (OPS CTRL) is intended to provide direct operational contact details between aircraft operators, ATSUs and RCCs to ensure coordination between stakeholders in the event of a tracking related incident.

Additionally, the OPS CTRL acts as the user authorization mechanism for access to the LADR. The data access rights which determine what can be seen by each user are inherited from the OPS control directory and are used to ensure information is only provided to those who have a legitimate need to access it.

There are 2 types of contact details for each organization in the OPS CTRL. The focal point is responsible to provide and update the operational contact details and to authorize additional users who will be able to access the data. The operational contact information is used to establish communications by the aircraft operator, ATSU or RCC, in the event that any concern exists regarding the safety of the aircraft. For all types of organizations, the information requested is presented in Table 6-6.

Table 6-6: Contact information

Organization focal point	Name Organization Email Telephone number
Operator/ATSU/RCC operational contact information	Name/position Telephone number Email AFTN address Operational hours

Each organization registered within OPS control directory (aircraft operator, ATSU, RCC) has a focal point which is created by the ICAO administrator when the organization is first registered.

The focal point is responsible for providing all the required information for the organization. The focal point must provide this information before access is given to view the contact information of other organizations. This is to ensure all organizations have provided their own contact information when using the system.

All OPS CTRL users will have access to search and view the contact database, although the access provided depends on the type of organization they are associated with, as described in Table 6-7.

Table 6-7: Access rights for users of the OPS control directory

Organization	User	Access rights
Aircraft operator	Focal point	Edit organization information. Search and view all ANSP contact information.
	Additional user	Search and view all ANSP contact information.
ANSP, as ATSU	Focal point	Edit organization information. Search and view all contact information.
	Additional user	Search and view all contact information.
SAR service provider, as RCC	Focal point	Edit organization information. Search and view all contact information.
	Additional user	Search and view all contact information.
Contributor	Focal point	No access to OPS control directory data, access provided for LADR only.
	Additional user	No access to OPS control directory data, access provided for LADR only.
Other	Focal point	No access to OPS control directory data, access provided for LADR only.
	Additional user	No access to OPS control directory data, access provided for LADR only.

6.5 Processes and Procedures

6.5.1 Aircraft operator process and procedure

a) Introduction

The aircraft operator process begins when the aircraft operator receives notification that an aircraft is in a distress condition. This may take the form of a message from the LADR informing them that information has been received from an aircraft.

Annex 6, Part I, Appendix 9, Standard 2.3 requires the aircraft operator to contact the ATSU when it has reason to believe that an aircraft is in distress. In such a case, the aircraft operator should use the OPS CTRL to determine the contact details for the appropriate ATSU. The OPS CTRL has been established to facilitate communication between aircraft operators and ATSUs.

A review of the typical sequence of events before and after the ATSU declaration of an emergency phase is useful to highlight the importance of early identification of aircraft experiencing distress events.

Aircraft operator activities related to the identification of an aeroplane that is potentially in distress are undertaken by the operator in addition to and to supplement the actions taken by an ATSU or flight crew, in accordance with Annex 2 – *Rules of the Air*, Annex 6 and Annex 11, as applicable.

b) Responsibilities, duties and tasks of operational control personnel

Annex 6, Part I provisions define the distress monitoring responsibilities that are to be assigned to flight operations officers/ flight dispatchers, if they are used, in conjunction with a method of control and supervision of flight operations.

Additionally, Annex 11 contains SARPs that address coordination between aircraft operators and ATSUs from an ATSU perspective. In order to support such coordination, aircraft operators need to assign the responsibilities to do so to appropriately qualified individuals. They should respond to requests for information from ATSUs and obtain information from the appropriate ATSU when needed (to fulfil monitoring requirements).

Such coordination can be accomplished by a flight operations officer or an appropriately qualified individual, as applicable. In either case, appropriate coordination is fundamental to support ATSU alerting and RCC coordination activities.

c) Validation of an ADT event

Where possible, a distress event should be validated by the aircraft operator. The aircraft operator may outsource validation to an ADT service provider. In this case, it is the ADT service provider that implements its own processes. Validation is a separate activity that should not impact the sending of position information to the LADR, which must happen automatically.

The current operator systems that allow for operator validation of an aeroplane experiencing a distress event predominantly rely on communication with the flight crew through either voice or data communications. A number of aeroplane systems may be available to determine the operational state of a flight, including VHF, HF and SATCOM voice or data communication. Other existing communication and data-gathering technologies associated with the aircraft tracking capability of an operator can also be leveraged to provide actionable information or data.

Attempts to communicate with the aeroplane should begin immediately; the time it takes to communicate with the aeroplane is a key factor to be considered by aircraft operators when developing policies and procedures. Operators with access to rapid and reliable communications systems will, for example, be able to determine the operational state of an aeroplane much faster than those with less developed communication capabilities. The aircraft operator's procedure for validating a distress event should, therefore, take into account the aircraft operator's capability to communicate with its aeroplanes. The operator may also determine when the assistance and support of a relevant ATSU is required to determine the operational state of an aeroplane.

d) Notification to ATSU

When a distress event is validated by the aircraft operator, or the operational state of the aeroplane cannot be determined, the operator contacts the appropriate ATSU to report the outcome of the validation checks with the latest known position and expected track of the aircraft. The aircraft operator may use the OPS CTRL for obtaining the appropriate ATSU point of contact.

Once the aircraft operator has contacted the appropriate ATSU and it is established that there may be an emergency, pursuant to Annex 11, 5.1.2, the ATSU will forward all information relevant to the state of emergency to the responsible RCC. The operator must make sure that flight position information, including all aeroplane tracking information, is available to the ATSU and RCC (as described in Annex 11, 5.1.2 and Annex 6, Part I, 6.18.3).

As soon as the aircraft operator is made aware that the aeroplane has resumed normal operations or has safely landed, the aircraft operator will notify the ATSU and the RCC that the aeroplane's distress condition has been cancelled.

As required by the Standards in Annex 11, 5.1.3 and Annex 12 – *Search and Rescue*, 2.3.7, to enable timely notification of the appropriate ATSU and in turn the RCC, the OPS CTRL must be populated with contact information for ATSUs and RCCs.

e) Activation of aircraft operator contingency procedures

Once it is confirmed that the aeroplane is in a distress condition, the aircraft operator should activate its contingency procedures and maintain close coordination with the ATSU and the RCC until the distress event is resolved.

f) Availability of data

The aircraft operator is required to make position information available to appropriate organizations, as identified by the State of the Operator. The LADR is the mechanism by which this information will be made available to ATSUs, RCCs and other agencies identified by the State. Based on the ATS data retention requirements in Annex 10, the system will store all data (ADT event and audit logs) for a period of at least 30 days from its submission.

6.5.2 ATSU process and procedure

Existing processes as described in Annex 11 are still applicable. The introduction of distress tracking does not alter these processes, rather it makes available additional data on the position of the aeroplane.

When an ATSU has reason to believe that an aeroplane is in distress, coordination will be established between the ATSU and aircraft operator. Flight crews of flights operating under instrument flight rules flight plans would advise the ATSU when possible, as soon as a distress or unusual situation is detected on board.

If such information or event is received or detected by an ATSU, the appropriate emergency phase would be declared, with follow-up actions which may lead to development through subsequent emergency phases. During the emergency phase, relevant information would be relayed to the appropriate RCC per Annex 11 requirements for further action per Annex 12.

Flight information centres or area control centres are responsible to act as a central point for collecting all information relevant to the state of emergency of an aircraft operating in their area of jurisdiction.

During emergency phases, additional sources of information for locating and tracking aircraft may be used (for example, radar tracking). Any relevant information should be made available as needed to the RCC.

6.5.3 RCC process and procedure

As specified in Annex 11, Chapter 5, the ATSU is expected to notify the RCC immediately when an aeroplane is considered to be in a state of emergency. In addition, the notification is expected to contain as much information as is available. Such information closely aligns with the contents of the aircraft tracking missed position report message template (Appendix A), which the aircraft operator should provide when notifying the ATSU.

Once notified of a distress event, the RCC will initiate action as required by Annex 12 and guided by the IAMSAR Manual.

If the ATSU was not the notification source, the RCC should contact the ATSU to confirm the possible distress event and have the ATSU gather further information, which would be the list of information in Annex 11, Chapter 5, including the most recent aircraft position data leading up to the ADT activation. These actions are taken concurrently as the RCC immediately initiates search and rescue actions. When the information concerning the emergency is received from another source, such as the ELT alert sent directly to the RCC via the Cospas-Sarsat system, the RCC will notify the associated ATSU and the aircraft operator, where possible, and keep the aircraft operator informed of all developments.

The responsible RCC and associated ATSU serving the flight/upper information region (FIR/UIR) in which the aeroplane is operating coordinate their activities and work closely together. The RCC is expected to provide the ATSU with information on the planned search and rescue actions initiated by the RCC so that such information can be passed on to the aeroplane while it is still in flight if practicable, and to keep the ATSU informed of SAR operations in their airspace.

If the aeroplane in distress continues in flight and crosses into another SRR, the first RCC originally notified will contact and coordinate with the other RCC to decide which RCC will be responsible for coordinating the search and rescue operation. If coordination is handed off to another RCC, then its associated ATSU would be expected to support that RCC.

The RCC and ATSU will keep each other informed as to changes in the emergency phase after the initial declaration and as to whether the aeroplane has resumed normal operations or has safely landed, and, as soon as practicable, notify the aircraft operator concerned.

RCC procedures to appropriately respond to distress messages from an aircraft still in flight might include:

a) determine the State of registration of the aircraft and aircraft position from the alert or notification;
b) log in to the LADR to access all available information for the event, including the aircraft's LKP;
c) contact the appropriate ATSU and operator to exchange further information about the distress event using the contact information for both the ATSU and operator in the OPS control directory;
d) monitor the LKP available in the LADR to assist in determining the trajectory of the aircraft to support coordination with the appropriate ATSU and neighbouring RCCs, as appropriate;
e) prepare for a SAR operation, while monitoring incoming messages for a possible cancellation message; and
f) launch SAR activities appropriate to the implicated SRR and communicate with other appropriate RCCs to inform them of the event.

6.6 ICAO ADT survey

ICAO has conducted a survey on state's implementation for autonomous distress tracking (ADT), refer to Appendix B of this guideline. This survey, as a checklist, checks the progress of their readiness for the reception and handling of ADT Alert. The stakeholders involved in implementation of the ADT are:

a) state;
b) aircraft operator;
c) SAR service provider, as RCC/RSC; and
d) air navigation service provider, as ATSU.

Appendix A – Aircraft tracking missed position report message template

	Aircraft tracking missed position report message *From:* _____ *To:* _____ *This message provides information regarding potential uncertainty as to the safety of an aircraft. This is a request for action to resolve this uncertainty.* *Please contact*_____*at*_____*with details of action taken.*	
	Required information	
1.	Initial or subsequent notification indication	
2.	Aircraft identification in Field 7 of filed flight plan	
3.	Aircraft type	
4.	Last known position (Time, Latitude and Longitude or bearing and range)	
5.	Time of last communication	
6.	Last known flight level or altitude	
7.	Next expected position (if known), and estimate	
8.	Name of air traffic service unit notified	
9.	Name of operator	
10.	Contact details of operator primary point of contact for this event	
	Supplementary information, if available	
11.	Contact actions attempted, including frequency channels and SATCOM numbers	
12.	Aircraft registration (if different from aircraft identification in 2 above)	
13.	Information contained in Item 19 of the filed flight plan	
14.	If not included in 13 above, fuel endurance or fuel endurance remaining at last known position	
15.	Total persons on board	
16.	Alternate or possible alternates	
17.	Any other relevant information (for example, dangerous goods on board, etc.)	

(Reference: ICAO Doc 8168 PANS-OPS, Volume III, Section 10, Chapter 1, Appendix 1 and Doc 10165 Manual on Global Aeronautical Distress and Safety System)

Intentionally Left Blank

Appendix B – ICAO ADT Survey

SURVEY ON STATE'S IMPLEMENTATION FOR AUTONOMOUS DISTRESS TRACKING (ADT)

STATE		
Check the box if State has:		
1	☐	Registered a State Focal Point in the ICAO OPS CTRL Directory (email: aircrafttracking@icao.int website: https://www4.icao.int/opsctrl/).
2	☐	Taken action to ensure and facilitate the registration of all relevant State organizations [i.e. air navigation service provider (ANSP), search and rescue (SAR) service provider and aircraft operators] in the OPS CTRL Directory.
3	☐	Taken action to ensure the required operational contact details are recorded in the OPS CTRL Directory for ANSP, SAR service provider and aircraft operators.
4	☐	Implemented regulations, for aircraft operators, on compliance to Annex 6 Section 6.18.
5	☐	If applicable, implemented processes for applications of special exemptions for aircraft operators, on compliance to Annex 6 Section 6.18.
6	☐	Ensured relevant stakeholders are subscribed to Location of an Aircraft in Distress Repository (LADR) notifications.
7	☐	Ensured relevant stakeholders implemented the capability to receive LADR notifications and access the LADR, to obtain further Autonomous Distress Tracking (ADT) notification information and data.
8	☐	Incorporated procedures for response to ADT notifications for ANSP, SAR service provider and aircraft operators.
9	☐	Incorporated ADT considerations in procedures and manuals for safety oversight of ANSPs and SAR service providers and aircraft operators.
10	☐	Published and promulgated educational material on ADT for aircraft operators, air traffic service (ATS) unit, Rescue Coordination Centre (RCC) personnel and other necessary stakeholders.

AIRCRAFT OPERATORS		
Check the box if relevant State-based Aircraft Operators have:		
1	☐	Registered in the ICAO OPS CTRL Directory (email: aircrafttracking@icao.int website: https://www4.icao.int/opsctrl/).
2	☐	Subscribed to LADR notifications.
3	☐	Implemented the capability to receive LADR notifications and access the LADR, to obtain further ADT notification information and data on their aircraft.
4	☐	Developed procedures for the initial aircraft operator response to ADT notifications and for informing appropriate ATS Units of the outcome of ADT validation checks.
5	☐	Trained flight dispatch and other relevant personnel to understand ADT notifications and to execute ADT procedures accordingly.

SAR SERVICE PROVIDER (RCC/RSC)		
Check the box if the SAR Service Provider has:		
1	☐	Registered in the ICAO OPS CTRL Directory for RCCs (email: aircrafttracking@icao.int website: https://www4.icao.int/opsctrl/).
2	☐	Subscribed to LADR notifications.
3	☐	Ensured State RCCs implemented the capability to receive LADR notifications and access the LADR, to obtain further ADT notification information and data.
4	☐	Implemented procedures for the response to ADT notifications and coordination with ATS units.
5	☐	Trained SAR personnel to understand ADT notifications and ELT(DT) alerts, and to execute ADT procedures accordingly.

AIR NAVIGATION SERVICE PROVIDER		
Check the box if the ANSP has:		
1	☐	Registered in the ICAO OPS CTRL Directory (email: aircrafttracking@icao.int website: https://www4.icao.int/opsctrl/).
2	☐	Subscribed to LADR notifications.
3	☐	Ensured ATS units implemented the capability to receive LADR notifications and access the LADR, to obtain further ADT notification information and data.
4	☐	Implemented procedures for the response to ADT notifications and coordination with aircraft operators and RCCs.
5	☐	Trained relevant ATS personnel to understand ADT notifications and ELT(DT) alerts, and to execute procedures accordingly.